LITVINOV, Ye.M.; GLEZER, I.G.; GOL'DSHTEYN, B.O.; NOVIKOVA, V.I.

Operation of small size Dinas(silica)brick coke ovens. Koks i khim. no.2:25-27 '63. (MIRA 16:2)

1. Koksokhimstantsiya (for Litvinov). 2. Yenakiyevskiy koksokhimicheskiy zavod (for Glezer, Gol'dshteyn, Novikova).
(Yenakiyevo—Coke ovens)

KAPIAN, M.I., GOL'DSHTEYN, B.Z., TOVPIK, E.S.

Automatic machine for making cylindrical springs. Stan.i instr. 31 no.4:36-37 Ap '60. (MIRA 13:6)
(Machine tools)

Kerosene for tractors. D. L. Gol'dshtein, P. A. Kudryavtzev and Z. V. Veksler. *Neftyanoe Khozyaistvo* 20, No. 3, 7-15(1934).—A variety of kerosenes are characterized (charts and tables). It is concluded that Baku kerosene behaves best, provided that its end point does not exceed 300°. Light fractions should be eliminated because of their value in gasoline. The antiknock value is highest with Baku kerosenes, and lowest with Grozny kerosene; the latter should, therefore, not be used as tractor fuel. An excessively high boiling kerosene causes high dilns. of the crank-case oil. A. A. Boehtlingk

ASM SLA METALLURGICAL LITERATURE CLASSIFICATION

Production of high octane aviation gasoline by cracking with aluminum chloride [illegible] Godchaux and H. A. Ling [illegible] Neftyanoe Khoz. 1936, No. 8, 40-2. It is possible to produce by this method aviation gasoline having an octane number higher than 100. This gasoline is very stable and does not require any additional refining. L. I.

22

Fuels for high speed Diesel engines D. I. Gel'dshtein and G. D. Pereyaslitsin. Neftyanoe Khoz. 1936, No. 11, pp. 55. Among the Diesel fuels investigated, the lowest retardation of ignition and the lowest critical compression were observed with paraffinic (Surakhany), Grozny and Kara Chukhur fuels. The naphthenic and naphthenic-aromatic fuels (Balakhany heavy and Binagady crude oils, of various fractional compns. and the mixt. of heavy Balakhany gas oil with Bibi-Eibat gas oil (ratio 1:1) yielded less satisfactory ignition results, while the Maikop and the com. gas oils occupied an intermediate position. The ignition point of the fuel is lowered in the presence of hydrocarbons that can be sulfonated, and the sulfonation shortens the ignition period. The effect of the fractional compn. on the behavior of the fuel in the motor depends on the crude oil. Thus, the lighter fraction of the heavy Balakhany crude oil have a higher cetane number, while the same Surakhany oils have a higher cetane number for the same fraction, which then decreases after a definite spec. limit has been reached. Mixts. of various Diesel fuels show no additive effect of the cetane number. The critical compression point of the fuels increased with lower air temp., whereby the relative distribution of the fuels by their critical compression remains the same; this is of great importance during the starting period. With lowering of the advanced angle from the critical compression increases, the fuels of low cetane no. yielding a higher increase of the critical compression. The pressure of the injection has no appreciable effect on the degree of critical compression. The absolute value of the ignition-lag period is within 0- for paraffinic and up to 20- for heavy fuels of the naphthenic and naphthenic-aromatic class; it also depends on the number of revolutions of the engine. High-speed engines work more economically with heavier gas oil, while at lower speeds the light gas oil is more economical. The expts. are described in detail. A. V. Roehlingk

ASM SLA METALLURGICAL LITERATURE CLASSIFICATION

Cracking sulfur containing crude oils [illegible]

Desulfurization of gasoline with aluminum chloride. D. [illegible] Gol'dshtein and A. Va. Semenova. *Neftyanoe Khozyaistvo* 1939, No. 2, 22-4.—The extent of desulfurization of gasoline with $AlCl_3$ depends upon the amt. of reagent employed, the temp. and duration of heating. In lab. expts. the optimum time at atm. pressure was 1 hr. and prolonging the length of treatment had practically no effect on the desulfurization. The process is carried out at 20-50° depending upon the nature of the gasoline. In order to decrease the consumption of $AlCl_3$ the gasoline is first treated with 2.5% soln. of caustic soda. The $AlCl_3$ and the S compds. form a fluid complex which is easily destroyed by water or alkali with the formation of HCl and an oily layer (48-50%) consisting of the hydrocarbon part and the S compds. The complex obtained from the first treatment is used for desulfurizing a fresh portion of gasoline. It was established that 2% of such material was equiv. to 0.5% of fresh $AlCl_3$. By reusing the complex the consumption of $AlCl_3$ was reduced to 0.33-0.45%. The Pb susceptibility of the desulfurized gasoline was increased greatly. Ishimbaevo gasoline with an end point of 143° had an octane no. of 55 without Pb and 83 with 3 ml./kg. of Pb soln. In addn. the desulfurized gasoline does not require a redistn. Flowsheets are included.

B. Z. Kamich

ASM SLA METALLURGICAL LITERATURE CLASSIFICATION

CA

2 2

Investigation of Diesel-engine fuels under starting conditions. D. L. Gol'dshtein. *Neftyanoe Khoz.* 1939, No 10 11, 11[illegible]; *Khim. Referat. Zhur.* 1940, No. 5, 105. The effect of low temps in CFR motors (without a preliminary warming up) was investigated. Lowering the temp. of the air (from 20 to [illegible]30°) and of the cylinder (with water) does not increase equally the critical degrees of compression of various fuels. The cetene nos. (det'd by the standard method at high temps.) do not characterize the starting properties of the fuel. Optimum self ignition consts are obtained for gas oil from Bibeibat petroleum, followed by gas oils from the Emba and heavy Balakhan petroleums. Self-ignition of fuels from Ukhon petroleum decreases sharply with decrease of the temp. The increase of resistance with decrease of the temp. in a Bosch filter is conditioned by the increase of η and by mech. impurities. It is proposed to place the filter where it will be kept warm by heat from the motor. W. R. Hom

GOL'DSHTEYN, D.L.

USSR/Chemical Technology - Chemical Products and Their Application. Treatment of Natural Gases and Petroleum. Motor and Jet Fuels. Lubricants. I-8

Abs Jour : Ref Zhur - Khimiya, No 1, 1958, 2565

Author : Gol'dshteyn, D.L., Snnayder, G.S., Osipov, L.N., Cherenkov, A.A., Al'tshuler, A.G., Ryzhkova, Ye.M., Zhadanovskiy, N.B.

Inst : -

Title : Hydro-Purification of Sulfur-Containing Petroleum Products in an Industrial Unit.

Orig Pub : Khimiya i tekhnol. topliv i masel, 1957, No 6, 36-41

Abstract : Presentation of data on hydro-purification, in an industrial unit, over an Al-Co-Mo catalyst, of a direct distillate obtained from a mixture of sulfur-containing petroleum varieties (SP), light gas oil of catalytic cracking 200-500° fraction (LG) and their mixture (M) at a 1:1 ratio. Temperature of hydro-purification 380-395°, pressure 40 atmospheres gauge pressure. As a result the

Card 1/2

DRUZHININA, A.V.; RYSAKOV, M.V.; GOL'DSHTEYN, D.L.; NIKOLAYEVA, V.G.; MYACHINA, M.S.; ROGOV, S.P.

Production low pour-point motor and industrial oils from different crudes by means of hydrogenation and carbamide dewaxing methods. Trudy VNII NP no.7:166-180 '58. (MIRA 12:10)
(Petroleum--Refining) (Lubrication and lubricants)

GOL'DSHTEYN, D.L.; RYSAKOV, M.V.; SKRIPNIK, Z.M.; ROGOV, S.P.

Production of transformer and turbine oils by hydrogenation of sulfur-bearing petroleum products. Trudy VNII NP no.75:245-253 '58. (MIRA 12:10)

(Petroleum products) (Hydrogenation)

5.3300(B)

SOV/65-59-6-6/17

AUTHORS: Osipov, L.N. and Gol'dshteyn, D.L.

TITLE: Selective Hydropurification of Gasoline by Catalytic Cracking

PERIODICAL: Khimiya i tekhnologiya topliv i masel, 1959, No 6, pp 22-25 (USSR)

ABSTRACT: Gasolines obtained during catalytic cracking of sulphur-containing petroleum products contain considerable quantities of sulphur and olefins which are unstable with regard to oxidation as well as diolefins. These gasolines can be purified effectively by selective hydropurification on active catalysts as aluminium tungsten nickel and aluminium-cobalt molybdenum catalysts (according to GOST 2084-50 for A-70 grades). After a cycle of about 1000 hours, these catalysts have to be regenerated and treated with H_2S at high temperatures. Hydropurification experiments were carried out with circulating gas, the latter being under pressure of 10 to 40 atm. Temperatures were 300 to 460°C and the space velocity 2 to 10 litre/litre of catalyst/hour at varying volumes of the circulating gas. The optimum conditions for the hydropurification of the 350 to 540° fraction of

Card 1/3

66957

SOV/65-59-6-6/17

Selective Hydropurification of Gasoline by Catalytic Cracking

tar petroleums on a microspherical catalyst are given, as well as the characteristics of the catalyst itself. The effect of the pressure, temperature and space velocity on the degree of desulphurisation of gasoline, on the hydrogenation of unsaturated hydrocarbons and on the octane number was investigated (fig 1 to 3). The rate of hydrogenation of the unsaturated hydrocarbons increases more rapidly when raising the pressure and especially the temperature (to 420°C) than the rate of desulphurization. It was found that the octane number increased due to the decreased degree of conversion at temperatures of 460°C and also due to the aromatization of the gasoline. Optimum conditions for the process are given as follows: pressure - 10 to 20 atm, temperature 340°C, space velocity of supply of the starting materials (catalyst/hour) 5.0 litre/litre, circulation of hydrogen - 300 ml/litre of raw material. The aluminium-tungsten nickel catalyst was shown to be more effective than the aluminium cobalt-molybdenum catalyst (viz table). Analogous experiments were carried out with gasoline obtained during the catalytic cracking

Card 2/3

SOV/65-59-6-6/17

Selective hydropurification of Gasoline by Catalytic Cracking of the 320 to 500°C fraction of Romashkin Devonian petroleum on a synthetic aluminium silicate catalyst. This gasoline contains a smaller quantity of sulphur and unsaturated hydrocarbons. A 96.0% yield of purified gasolines was obtained. The aluminium-cobalt molybdenum catalyst is more easily regenerated and is therefore recommended for industrial purposes. There are 3 figures, 1 table and 5 references, 2 of which are Soviet and 3 English.

ASSOCIATION: VNII NP

Card 3/3

45383

S/081/63/000/002/069/088
B160/B144

11.6140

AUTHORS: Osipov, L. N., Gol'dshteyn, D. L., Agafonov, A. V.

TITLE: Hydrofining of diesel fuels

PERIODICAL: Referativnyy zhurnal. Khimiya, no. 2, 1963, 461, abstract 2P128 (Tr. Vses. n.-i. in-t po pererabotke nefti i gaza i polucheniyu iskusstv. zhidk. topliva, no. 8, 1959, 54 - 73)

TEXT: The process of hydrofining sulfurous straight-run distillates and secondary distillates was studied in laboratory high-pressure circulation equipment with an industrial Al-Co-Mo catalyst. The rate of hydrating the S-compounds and unsaturated hydrocarbons at the given partial H_2 pressure is shown to increase as the temperature rises to 420°C; at a higher temperature of the order of 460°C the rate of hydration decreases. The optimum partial H_2 pressure in the hydrofining of diesel-fuel distillates depends on the chemical composition of the crude. Hydrofining of low-aromatic distillates can be carried out at a comparatively low partial H_2 pressure (15 - 20 atm.) and hydrofining of aromatized distillates (e.g. catalytic-

Card 1/2

30219

S/081/61/000/019/063/085
B117/B110

11.9100

AUTHORS: Druzhinina, A. V., Gol'dshteyn, D. L., Rysakov, M. V.

TITLE: Production of low-solidifying industrial oils and motor oils from various sulfuric raw materials by hydrogenation and deparaffination with carbamide

PERIODICAL: Referativnyy zhurnal. Khimiya, no. 19, 1961, 420, abstract 19M147 (Sb. "Khimiya sera- i azotorgan. soyedineniy, soderzhashchikhsya v neftyakh i nefte-produktakh", Ufa, v. 3, 1960, 377 - 387)

TEXT: It was found that industrial oils and motor oils can be produced by hydrogenation and deparaffination of primary and secondary distillates with carbamide (raw material: wide distillation fraction from Romashki petroleum at 320° - 460°C, gas oil fraction obtained by catalytic cracking of heavy distillation material of the same petroleum at 200 - 485°C, and a fraction obtained by catalytic cracking of masut at 200 - 500°C). The chemical-technological nature of the process is due to the action of hydrogen upon high-molecular substances containing sulfur, nitrogen, and

Card 1/2

Production of low-solidifying . . S/081/61/000/[illegible]/063/085
B117/B110

oxygen in the distillates at high temperatures accompanied by their decomposition under the formation of low-molecular hydrocarbons, hydrogen sulfide, and other compounds. At the same time, unsaturated hydrocarbons are converted into saturated ones, the content of methane-naphthene hydrocarbons increases and that of tar and polycyclic aromatics is reduced. The content of high-quality oil components is not affected by hydrogenation. The deparaffination of hydrogenated distillates with carbamide is practically accompanied by a complete removal of largely normally structured paraffins. The solidifying point is thus considerably reduced. A diagram of oil production is given. [Abstracter's note: Complete translation.]

Card 2/2

GOL'DSHTEYN, D.L.; OSIPOV, L.N.; AGAFONOV, A.V.

Selective hydrofining of catalytically cracked gasolines. Khim.sera i azotorg.soed.sod.v neft.i neftepred. 3:389-395 '60. (MIRA 14:6)

1. Vsesoyuznyy nauchno-issledovatel'skiy institut po pererabotke nefti i gaza i polucheniyu iskusstvennogo zhidkogo topliva.
(Gasoline) (Cracking process)

GOLDSHTEYN, D.L.

5

AGAFANOV, A.V., RYSAKOV, M.V., GOLDSHTEYN, D.L., GUSEMKOVA, YE.A., ALPTMOVA, YE.A., POSHITNOV, V.N.,

Gewinnung von Motorenolen aus schwefelhaltigen Rohölen durch Hydrierung.

Report to be submitted for the Symposium Lubricants and Lubrication, Dresden, 27-30 June 1961

S/065/61/000/004/003/011
E194/E284

AUTHORS: Rogov, S. P., Danilevich, A. F., Gol'dshteyn, D. L., Rysakov, M. V. and Agafonov, A. V.

TITLE: Hydrofining of Lubricating Oils

PERIODICAL: Khimiya i tekhnologiya topliv i masel, 1961, No. 4, pp. 23-27

TEXT: Hydrofining is under consideration as a replacement for earth treating in finishing of solvent raffinates. This article describes tests on the hydrofining of distillates (spindle oil and machine oil Type AC-5 (AS-5)) and residual de-waxed phenol raffinates of the Novokuybyshevsk NPZ. The hydrofining was carried out on a large laboratory pilot plant with gas circulation, finishing with steam stripping. A study was first made of the influence of pressure and it was concluded that the pressure of 40 atmospheres, the highest tried, was the best in respect of improving the viscosity index, reducing the coke number and sulphur content and improving the colour of the finished oils. The ratio of volumes of oil per hour to volume of catalyst ranged from 1 to 4. The influence of treatment temperature was then studied using

Card 1/5

S/065/61/000/004/003/011
E194/E284

Hydrofining of Lubricating Oils

on the one hand an aluminium-cobalt-molybdenum catalyst and on the other an aluminium-molybdenum catalyst. These tests were made with machine oil Type AS-5 at a total pressure of 40 atm and a delivery rate by volume relative to catalyst of 3 l/hours and a gas circulation rate of 300 litres at n.t.p. per litre of feed at temperatures of 275, 300, 325 and 350°C. It was shown that increasing the temperature has much the same effect as decreasing the feed rate. As a rule increasing the temperature somewhat increases the pour point which rose from -18°C with a treatment temperature of 350°C. Tables are then given of the characteristics of hydrofined spindle (Table 3) and residual (Table 4) oils under optimum process conditions. Table 3 was obtained with an aluminium-molybdenum catalyst and Table 4 with aluminium-cobalt-molybdenum catalyst.

Card 2/5

S/065/61/000/004/003/011
E194/E284

Hydrofining of Lubricating Oils

Table 3

	Feed	Treated Oil	
		300°	325°
Viscosity centistokes:			
at 50°C	19.03	18.74	18.25
at 100°C	4.87	4.80	4.77
Viscosity index	92.3	93.8	95.7
Pour point °C	-14	-13	-12
Flash point °C	190	200	198
Colour NPA	2.5	1.5	1.5
Sulphur content % weight	0.96	0.92	0.86
Coke No. % weight	0.03	0.02	0.01
Corrosivity Pinkevich gms/m^2	6.65	2.13	-
Yield % weight	100.0	99.4	99.1

Card 3/5

S/065/61/000/004/003/011
E194/E284

Hydrofining of Lubricating Oils

Table 4

	Feed	Treated Oil
Viscosity centistokes:		
at 50°C	159.35	153.87
at 100°C	20.98	20.80
Viscosity index	85.1	88.4
Pour point °C	-10	-8
Flash point °C	246	270
Colour NPA	6.5	3.5
Sulphur content % weight	1.03	0.81
Coke No. % weight	0.38	0.27
Yield % weight	100	99.1

The hydrogen consumption in treating the distillate oil was 0.13% weight and in treating the residual oil 0.15% weight. The results of hydrofining and earth finishing are then compared and it is

Card 4/5

OSIPOV, L.N.; FERSHT, I.Ya.; ROGOV, S.P.; GOL'DSHTEYN, D.L.

Hydrofining of a diesel fuel distillate by means of hydrogen in the presence of carbon monoxide and carbon dioxide impurities. Khim. i tekh. topl. i masel 6 no. 5:15-17 My '61. (MIRA 14:5)

1. Vsesoyuznyy nauchno-issledovatel'skiy institut po pererabotke nefti i gaza i polucheniyu iskusstvennogo zhidkogo topliva.
(Diesel fuels) (Hydrogen)

26520

S/065/61/000/008/003/009
E030/E135

11.0140

AUTHORS: Rogov, S.P., Gol'dshteyn, D.L., Osipov, L.N., and Agafonov, A.V.

TITLE: Hydrofining the high-sulphur kerosine-gas oil fraction of Arlan crude

PERIODICAL: Khimiya i tekhnologiya topliv i masel, 1961, No.8, pp. 13-19

TEXT: The preparation of satisfactory diesel fuels from Arlan crudes has been investigated by VNII NP. In the laboratory straight fractions were hydrofined; this process lowers the flash point and it was found necessary to remove subsequently the fractions boiling up to 180 °C to keep the flash point in the 60-65 °C region. However, the diesel fuel then fails specification ГОСТ 4749-49 (GOST 4749-49) and 305-58, on pour point (-9 °C instead of -10 °C). However, hydrofining cat. cracked products gives satisfactory diesel fuels, and it is recommended that these be blended with the straight run components. In order to increase the output of the benzine fractions, without raising the diesel pour point, hydrofining experiments were then conducted on a

Card 1/2

S/065/61/000/004/004/011
E194/E284

AUTHORS: Gerasimenko, N. M., Yastrebov, G. I., Badyshtova, K. M., Gol'dshteyn, D. L., Pisarchik, A. N., Zhadanovskiy, N. B., Finelonov, V. P. and Kartunov, G. S.

TITLE: Hydrofining of Lubricants

PERIODICAL: Khimiya i tekhnologiya topliv i masel, 1961, No. 4, pp. 27-31

TEXT: Lubricants produced at modern refineries running on eastern high-sulphur crudes are finished with earth but the lubricants obtained are not of satisfactory quality, particularly in respect of colour, and the yield is low. Accordingly, VNII NP and GrozNII have investigated catalytic refining of lubricants in the presence of hydrogen (hydrofining) to replace earth treatment. Various distillate and residual lubricating oils produced from sulphurous crudes by phenol and furfurol extraction were hydrofined under laboratory conditions. The work showed that hydrofining with aluminium-cobalt-molybdenum catalyst considerably improved the colour, somewhat improved the viscosity index and

Card 1/3

S/065/61/000/004/004/011
E194/E284

Hydrofining of Lubricants

oxidation stability and reduced the coke number. There was some reduction in viscosity and increase in pour point. Depending upon the properties of the feed the output of hydrofined oil was 98-99.5%. The Novokuybyshevskiy neftepererabatyvayushchiy zavod (Novokuybyshevsk refinery), together with the Kuybyshev NII NP organized a plant trial on hydrofining of various de-waxed lubricating oil raffinates from sulphurous crudes. Representatives of VNII NP, GrozNII and Giprogrozneft' participated in the trials. The lubricating oils were hydrofined on a reconstructed plant for hydrofining of diesel fuels. Tests were made on two distillates, one a spindle and the other a machine oil, and one residual oil. The de-waxed feed passed to heat exchangers where it was heated by finished oil issuing from the reactor and was then finally heated to temperature in a furnace before passing to the reactor. Before entering the furnace the feed was mixed with hydrogen containing gas and was then passed to the top of columns loaded with aluminium-cobalt-molybdenum catalyst. On leaving the column the product passed through the heat exchangers, thence to a gas

Card 2/5

S/065/61/000/004/004/011
E194/E284

Hydrofining of Lubricants

separator and the finished product was vacuum stripped. The main characteristics of the catalyst are given. The oils produced were spindle oil, machine oil and residual oil with viscosity of 20.66 centistokes at 100°C. The results of hydrofining and of earth treatment are compared in Table 3. It will be seen that the hydrofined oils have much better colour, lower coke number, lower sulphur content, higher viscosity index but that there is some loss of viscosity and 1-2° higher pour point. Preliminary technical and economic calculations indicate that the capital costs of constructing hydrofining and earth treatment plant is about the same but with hydrofining running costs are about 32% less than with clay treatment. There are 1 figure and 3 tables.

ASSOCIATION: NK NPZ

NOVOKUBYSHEVSKIY NEFTEPERERABATYVAYUSHCHIY ZAVOD

Card 3/3

GOLDSHTEYN D. L.

14

RYSAKOV, M.V., GOLDSHTEYN, D.L., GUSENKOVA, YE.A., ALFIMOVA, E.A., BOROVAYA, M.S., FUCHKOV, N.G., KAZANSKIY, V.L., BADYSHTOVA, K.M., ROGACHEVA, I.M., CHESNOKOV, A.A., DENISENKO, K.K., ALTSHULER, A.G., GERASIMENKO, N.M., YASTREBOVA, G.I., ZHADANOVSKIY, N.B.

Production of High-grade petroleum oils and waxes by hydrogenation.

Report to be submitted for the Sixth World Petroleum Congress, Frankfurt, 16-26 June 63

3/065/63/000/003/001/006
E075/E436

AUTHORS: Rysakov, M.V., Agafonov, A.V., Gol'dshteyn, D.L., Osipov, L.N., Rogov, S.P., Khavkin, V.A.

TITLE: Hydrofining of diesel fuels with a considerable reduction of hydrogen consumption

PERIODICAL: Khimiya i tekhnologiya topliv i masel, no.3, 1963, 7-11

TEXT: In an attempt to refine sulphurous diesel fuels with a reduced quantity of hydrogen, a method was developed with the use of internal H_2 (autofining) as well as external H_2. It was applied to a 1:1 mixture of diesel fuel fractions from Arlan crude and catalytic gas oil from Romashkino crude. The method gave the optimum results at 30 kg/cm^2 and 400°C. Lowering the pressure to 22 kg/cm^2 does not affect the H_2 consumption. Increase of temperature to 420 - 440°C, although decreasing the H_2 consumption, may shorten the catalyst life (alumino-cobaltomolybdate). At 400°C and 30 kg/cm^2 the content of aromatics decreases to 16.3% from 21.6% with a simultaneous increase in the amount of naphthene-paraffins. The catalyst was used without losing its activity for 400 hours at a space velocity of 2.0 h^{-1}, temperature 400°C, pressure 30 kg/cm^2 and H_2 circulation of 300 m3/m3. The

Card 1/2

S/065/63/000/003/001/006
E075/E436

Hydrofining of diesel ...

consumption of H_2 was 0.2 to 0.3 wt.% of the diesel fuel. The refined fuel contained 0.12 to 0.13% S (originally 1.62%). There are 4 tables.

ASSOCIATION: VNII NP

Card 2/2

[illegible] akademik; MUKHAMEDZAYA, I.A., kand.[illegible]
[illegible], P.A., kand.tekhn.nauk; [illegible]

Transformer oils from sulfur-bearing pe[illegible]
[illegible]

[illegible] Pennsylv[illegible].

PANFILOVA, Z.I.; AGRELI, M.I.; KOLICHOV, I.S.; FAUSTOVA, D.G.; GOL'DSMYTH, D.S.; GORDEYEVSKIY, S.N., red.; TIMOFEYEV, V.B., red.; IGOSHEVINA, V.A., red.; VLASOVA, N.A., tekhn. red.

[Protective coatings in atomic engineering] Zashchitnye pokrytiia v atomnoi tekhnike; sbornik statei. Moskva, Gosatomizdat, 1963. 183 p. (MIRA 16:12)

(Shielding (Radiation))

ACCESSION NR: AT4017008 S/3057/63/000/000/0173/0182

AUTHOR: Gorodinskiy, S. M.; Panfilova, Z. Ye.; Gol'dshteyn, D. S.; Nosova, L. M.; Fishevskaya, E. A.

TITLE: A laboratory method for the comparative estimation of the deactivation of materials contaminated by fission product isotopes

SOURCE: Zashchitny*ye pokry*tiya v atomnoy tekhnike (Shielding in nuclear engineering); sbornik statey. Moscow, Gosatomizdat, 1963, 173-182

TOPIC TAGS: radioactive element, nuclear shielding, decontamination, deactivation, fission product, radioactivity, radioactive isotope, radioactive contamination

ABSTRACT: The possibility of removing radioactive contaminants from shieldings and other anti-radiation materials is one of the most important requirements of these shieldings. The deactivation solution consists of a 2% hydrochloric acid solution containing 0.3% of either OP-7 or OP-10 soap and 0.4% sodium metaphosphate. The sodium solution reacts with the cations of many radioactive isotopes and forms water-soluble compounds. In addition, the sodium metaphosphate softens the water, improving the washing action of the solution.

Card 1/3

ACCESSION NR: AT4017008

Samples during the tests were first deactivated by the solution and were then washed with water. The solution was then used again, and the samples were washed and dried. When this method was insufficient a solution of 5 grams of NaOH and 1 gram of $KMnO_4$ per liter was used with the same procedure. A counter was used to determine the radioactivity before and after testing. (See Fig. 1 of the Enclosure.) Orig. art. has: 2 figures and 1 table.

ASSOCIATION: None

SUBMITTED: 00 DATE ACQ: 20Feb64 ENCL: 01

SUB CODE: NP, OC NO REF SOV: 001 OTHER: 004

Card 2/3

ACCESSION NR: AT4017008 ENCLOSURE: 01

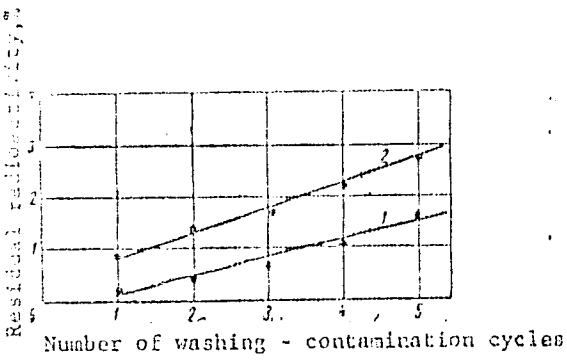

Fig. 1. Accumulation of residual radioactivity of polyvinyl chloride film during washing of the samples
1 - in cans while shaking; 2 - washing from sprayer

Card 3/3

GORODINSKIY, S.E.; PANFILOVA, Z.Ye.; GLASHTEYN, D.G.; NAZOVA, L.M.; SALTYKHATA, F.P., red.

[Decontamination of means of individual shielding and protective coatings] Dezaktivatsiia sredstv individual'noi zashchity i zashchitnykh pokrytii. Moskva, Atomizdat, 1964. 117 p. (MIRA 17:6)

NOVIKOV, V.A.; GOL'DSHTEYN, D.Ye., professor, zaveduyushchiy.

Repair of high-voltage roentgen cables of electrically safe X-ray apparatus. Vest.rent.i rad. no.2:57-59 Mr-Ap '53. (MLRA 6:6)

1. Kafedra rentgenologii Kazanskogo instituta usovershenstvovaniya vrachey imeni V.I. Lenina. (X-rays--Apparatus and supplies)

GOL'DSHTEYN, D.Ye., professor

Collateral lymph circulation in disorders of venous ganglia and in venous stagnation; experimental studies. Vest. rent. i rad. no.6:8-12 N-D '54. (MIRA 8:1)

1. Iz kafedry rentgenologii (zav.prof. D.E.Gol'dshteyn) i kafedry operativnoy khirurgii (zav. dotsent Ya.M.Krinitskiy) Kazanskogo instituta usovershenstvovaniya vrachey imeni V.I.Lenina.

(LYMPHATIC SYSTEM, physiology,
eff. of venous obstruct. on lymph circ., x-ray in animals)
(VEINS, physiology,
eff. of obstruct. on lymph circ., x-ray in animals)

ADRIANOVSKIY, A.F.; GOL'DSHTEYN, D.Ye., prof.; GOL'DSHTEYN, M.I.; MITTEL'BERG, Ya.B.; SUKHORUKOV, B.Z.; FATZULLIN, M.Kh., prof.

Seventh All-Union Congress of Radiologists. Kaz.-med.zhur. 40 no.2:99-102 Mr-Ap '59. (MIRA 12:11)

1. Zasluzhennyy deyatel' nauki Tatarskoy ASSR (for D.Ye.Gol'dshteyn).

(RADIOLOGY, MEDICAL--CONGRESSES)

GOL'DSHTEYN, D.Ye., prof.; SUKHORUKOV, B.Z., kand.med.nauk (Kazan')

"Radioactive phosphorus in medical practice" by E.D. Dubovyi. Reviewed by D.E. Gol'dshtein, B.Z. Sukhorukov. Kaz.med.zhur. 40 no.4: 106-108 Jl-Ag '59. (MIRA 13:2)
(PHOSPHORUS--ISOTOPES) (DUBOVYI, E.D.)

VYLEGZHANIN, N.., dozent; [illegible]; [illegible], [illegible]; [illegible], S.G.; KHAYKINSON, [illegible]; KHARIT[illegible], [illegible]; SI[illegible], [illegible], dotsent; GOL'DSHTEYN, D.Ye., prof.; [illegible], dotsent; [illegible], [illegible], dotsent; RITNER, Yu [illegible]; [illegible], I.V., prof.; [illegible]-YAROVA, A.K.;

Conference of physicians of the city of [illegible] the results of the Eighth International Cancer Research Congress [illegible] (C[illegible] 1958)

GOLDSHTEYN, D. Ye.

Colateral lymphatic circulation with acute infection and lumbosacral sympathectomy Operative pancreatography

Program for Medical Society of J. E. Purkyne, Czech. Radiology Congress, Karlovy Vary, Czech. 10-15 June 63

ACCESSION NR: AP4038942 S/0242/[illegible]/0044

AUTHOR: Akopyantsev, M. I.; Gol'dshteyn, D. Ye.; Mitel'berg, [illegible]

TITLE: Compensatory possibilities of the lymphatic system in [illegible] sickness

SOURCE: Meditsinskaya radiologiya, no. 5, 1964, 39-44

TOPIC TAGS: lymphatic system, collateral lymph vessel, acute [illegible] collateral lymph circulation stimulus, intravital lymphography, [illegible] radiation, local radiation reaction, reactive mechanism, inductive [illegible] stimulus, mechanical lymphatic stimulus

ABSTRACT: [illegible] ability of the body to create collateral [illegible] was studied in the [illegible] extremities of [illegible] aureus culture) or [illegible] irritation (from [illegible] dogs, divided into [illegible] groups, receiving a [illegible] lethal [illegible] dose. Method [illegible] used from intravital lymphography. In the first test [illegible] 12 days, [illegible] ability of the system increased considerably following radiation, but no [illegible] of collateral circulation was seen. In the 2nd series on the dogs

Card [illegible]

ACCESSION NR: AP4038942

infected with staphylococcus culture on the 2, 4 or 6th day after [illegible] collateral circulation developed only if the culture was injected [illegible] days. Later infection led to insignificant local but extensive [illegible] and early death. Infection on the first day led to considerable [illegible] Systemic and local reactivity of the organism thus appear in [illegible] with time. No development of collateral circulation was observed [illegible] of the 3rd series were infected 2-10 days prior to irradiation, [illegible] reaction was intense. They lived somewhat longer (probably due to the [illegible] of antibodies). Collateral lymph circulation was thus found to [illegible] active reaction of the integral organism rather than a result of [illegible] destruction. This was confirmed in 3 test series with tourniquets. [illegible] circulation appeared one day after removing the tourniquet if this [illegible] applied in the first 2 days following irradiation. Later application [illegible] early death. These results point towards the necessity of early [illegible] in radiation sickness, before the reactive mechanism of the organism [illegible] down. Orig. art. has: 4 figures.

ASSOCIATION: Patofiziologicheskaya laboratoriya Kiyevskogo nauchno-issledovatel'skogo instituta travmatologii i ortopedii.

Card 2/3

ACCESSION NR: AP4038942

Kafedra rentgenologii i radiologii No. 2 [illegible]
Kazanskogo instituta usovershenstvovaniya vrachey im. V. I. [illegible]
fic Research Institute of Traumatology and Orthopedics and [illegible]
Advanced Physicians' Training)

SUBMITTED: 10Oct63 ENCL: [illegible]

SUB CODE: LS NO REF SOV: 003 OTHER: [illegible]

Card 3/3

DUDKIN, M.S.; GOL'DSHTEYN, E.M.

Hydrolysis of adipic and sebacic acid polyanhydrides.
Zhur.ob.khim. 26 no.9:2559-2562 S '56. (MLRA 9:11)

1. Odesskiy tekhnologicheskiy institut imeni I.V. Stalina.
(Hydrolysis) (Anhydrides)

YASHNIKOV, D.I., inzh.; TILIK, V.T., inzh.; TROSHCHENKOV, N.A., inzh.; Prinimali uchastiye: SAMOYLOV, I.D., inzh.; [illegible] inzh.; KOZNETSOV, A.S., inzh.; BURBELO, [illegible], inzh.; KSENZUK, F.A., inzh.; [illegible]TEKINA, R.Ye., inzh.; GOL'DS[illegible], [illegible], inzh.; [illegible], inzh.

Reducing the consumption of tin in improving the microgeometry of sheet iron surfaces. Stal' 21 no.9:862-864 S '61. (MIRA 14:9)

1. Zavod "Zaporozhstal'".
(Tinning) (Surfaces (Technology))

Goldshteyn F.K.

USSR/Chemical Technology. Chemical Products and their Application. Glass. Ceramics. Building Materials. J-12

Abs Jour: Referat Zh.-Kh., No 8, 1957, 27689.

Author : M.M. Sherman, L.D. Nezhinskaya, M.N. Ortenberg, F.K. Gol'dshteyn.
Inst : Students' Scientific Society, Kharkov Polytechnical Institute.
Title : Drossing Method of Preparing Paste for Manufacturing Ceramic Floor Tiles.

Orig Pub: Tr. Stud. nauch. o-va. Khar'kovsk. politekhn. in-t, 1956, 1, No 1, 61-65.

Abstract: The possibility of the application of the dross method to the preparation of paste for manufacturing tiles of the clay from the Nikoforovsk and Nikolayevsk deposits is considered. It is noted that this method could be applied in practice, should the filtration capacity of clays from the above mentioned deposits be increased. The filtration capacity of clays is increased by decrea-

Card : 1/2 -74-

IOFFE, L., mayor meditsinskoy sluzhby; GOLDSHTEYN, G., mayor meditsinskoy sluzhby

Characteristics of medical services in air defense units. Tyl i snab. Sov. Voor. Sil 21 no.2:59-61 F '61. (MIRA 14:6)
(Medicine, Military)

GUREVICHEV, A.F.; GOL'DSHTEYN, G.I.

Pyrolysis of paraffinic solar oil by feeding the superheated steam into the pyrolysis coil of a pipe still. Khim.i tekh.topl.i masel 6 no.9:38-40 S '61. (MIRA 14:10)

1. Bakinskiy zavod, Neftegaz.
(Pyrolysis) (Absorption oils)

GOL'DSHTEYN, G.I.

Obtaining electrode coke from an oil extract of selective treatment. Neftepar. i neftekhim. no.8:[illegible]-30 '63. (MIRA 17:8)

1. Bakinskiy [illegible] "Neftegaz".

GOL'DSHTEYN, G.I.

Operating the reactor of a pyrolysis unit of decreased volume. Nefteper. i neftekhim. no.12:34-36 '65. (MIRA 18:4)

1. Bakinskiy zavod "Neftegaz".

GOL'DSHTEYN, G.M.

AID P - 2071

Subject : USSR/Electricity

Card 1/1 Pub. 26 - 13/29

Authors : Gol'dshteyn, G. M., Eng., and Sin'kov, V. M., Kand. of Tech. Sci., - Kuybyshev

Title : Reducing the cost of substations and modernization of their construction. (Discussion of an article by A. B. Krikunchik, this journal, 1954, No.2)

Periodical: Elek. sta., 4, 43-44, Ap 1955

Abstract : The authors criticize this article and make certain suggestions on the subject i.e. the possibility of a further enlargement of the site, the mass production of open-door 6-10 kv switch gear, greater use of mobile reserve transformers, etc. The authors recommend a detailed revision of all problems connected with the building and installation of substations.

Institution: None

Submitted : No date

Consultation on the Projection, Construction and Operation of 400 and 500 kV Lines 105-58-6-31/33

ting of the 400 kV plant. Several lectures were devoted to the problems of the administrative organization for the 400 kV networks being in operation. - The consultation conferred the task upon V.A. Vershkov, K.A. Sarkisov, I.A. Syromyatnikov, S.S. Rokotyan and M.I. Rapoport to work out a report. In this report the experience gained in the assembly and the operation of the equipment and apparatus for 400 kV shall be generalized. The Gosplan of the USSR was asked to check this report. At the end I.A. Syromyatnikov spoke on "Prospects of the Development of Power Engineering in the Soviet Union". - I.A. Syromyatnikov, S.S. Rokotyan and I.I. Falimonchuk were additionally admitted to the organizational committee. It was recommended to perform the next consultation in 1960-1961.

1. Electrical networks--Construction 2. Electrical networks --Operation

Card 2/2

GOL'DSHTEYN, I.; POPOVICH, K.

Changes in the blood pigment in acute experimental nitrobenzene poisoning. Gig. i san. 23 no.2:89 F '58. (MIRA 11:4)
(BENZENE--TOXICOLOGY) (BLOOD--PIGMENTS)

GOL'DSHTEYN, I., inzhener.

Balancing pairs of wheels without removing them from the car.
Zhil.-kom. khoz. 7 no.3:29 '57. (MLRA 10:4)

(Car wheels)

GOL'DSHTEYN, I., inzhener.

Ticket machines for conductors. Zhil.-kom.khoz. 7 no.9:28-29 '57. (MIRA 10:10)

(Great Britain--Electric railroads)

GOL'DSHTEYN, I., inzh.

Device for recording speed in municipal transportation systems. Zhil.-kom. khoz. 9 no.4:29 '59. (MIRA 12:7)
(Speedometers) (Local transit)

GOL'DSHTEYN, I., inzh.

Air conditioning in subway trains. Zhil.-kom.khoz. 9 no.12:31 '59. (MIRA 13:4)
(United States--Subways--Air conditioning)

VEREYUTIN, V.; GOL'DSHTEYN, I.; KASHIN, P.

Care of the hydraulic suspension system of the DT-54A tractor.
Trakt.i sel'khozmash. 30 no.10:40-41 O '60. (MIRA 13:9)

1. Stalingradskiy traktornyy zavod.
(Crawler tractors--Hydraulic equipment)

PALLADE, Sulamit; GOL'DSHTEYN, I. [Goldstein, I.]; POPOVICI, Karmen [Popovici, C.]; PAPNOTE, Marina

Effect of chlorpromazine (aminazine) in experimental nitrobenzene poisoning. Farm. i toks. 25 no.1:103-108 Ja-F '62. (MIRA 15:4)

1. Otdel gigiyeny truda Instituta obshchestvennogo zdravookhraneniya i gigiyeny Rumynskoy Narodnoy Respubliki.
(CHLORPROMAZINE) (BENZENE--TOXICOLOGY)

GOL'DSHTEYN, I.A.; GOMON, G.O.; ROGOZINA, I.D.; FUTERGENDLER, S.I.

Luminescence of diamonds excited by X-rays. Geofiz. prib. no.10:87-98 '61. (MIRA 15:3)
(Diamonds--Optical properties) (X-ray crystallography)

GALOCHKIN, Nikolay Aleksandrovich; LADYZHENSKIY, R.M., dotsent, retsenzent; GOL'DSHTEYN, I.D., redaktor; DASHKOVA, Z.F., redaktor; KOLESNIKOVA, A.P., tekhnicheskiy redaktor

[Ventilation of pulp and paper factories] Ventiliatsiia predpriiatii tsellyuloznobumazhnoi promyshlennosti. Moskva, Goslesbumizdat, 1955. 222 p. (MLRA 8:11)

(Ventilation) (Wood-using industries)

LUKOV, V.I.; ISPIRYAN, G.P., kand. tekhn. nauk; GOL'DSHTEYN, I.G., starshiy inzh.

System of "closed" shifts. Log.prom. 18 no.10:9-11 O '58. (MIRA 11:11)

1. Glavnyy inzhener Kiyevskoy obuvnoy fabriki No.4 (for Lukov).
(Shift systems)

L 3787-66 EWT(d)/EWT(m)/EWP(w)/EPF(c)/EWP(v)/EWP(j)/T/EW [illegible] (k)/ETC(m)
WW/EM/DJ/RM

ACCESSION NR: AP5023216 UR/0374/65/000/004/0151/0153
678:620.1.051

AUTHOR: Shreyber, G. K. (Moscow); Gol'dshteyn, I. I. (Moscow)

TITLE: Investigation of long-term static strength of fiber-glass plastics in oil media

SOURCE: Mekhanika polimerov, no. 4, 1965, 151-153

TOPIC TAGS: fiberglass, reinforced plastic, structural plastic, static load test, static test, endurance test

ABSTRACT: A unit is described for testing endurance of fiber-glass reinforced plastics subjected to continual static load in oil media. The loads are applied uniaxially. The unit is provided with a special deformation recording device. The breaking point of a fiber-glass reinforced plastic may be determined with an accuracy of up to one minute. The overall accuracy of this testing unit is at least 98%. The schematic diagram of the testing unit is shown in fig. 1 of the Enclosure. Orig. art. has: 2 figures.

ASSOCIATION: none

SUBMITTED: 25Mar65 ENCL: 01 SUB CODE: MT,

NO REF SOV: 006 OTHER: 000

Card 1/2

L 3787-66

ACCESSION NR: AP5023216

ENCLOSURE: 01

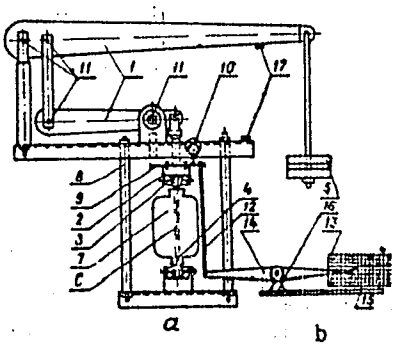

Fig. 1. Testing unit: (a)--the unit itself, (b)--the deformation recorder: 1--arm system; 2--iron clamp; 3--chuck jaw; 4--plastic bottle-neck; 5--load; 6--sample; 7--glass vessel, 8--casing; 9--fixed board; 10--ICh-10 indicator; 11--bearing; 12--pull rod; 13--drum; 14--recorder pen; 15--clock mechanism; 16--stand; 17--contacts.

Card 2/2

KARAYEV, G.A.; GOL'DSHTEYN, I.M.

Using the D-174-A brush cutter. Sbor.mat. o nov.tekh. v stroi. 16 no.6:20-21 '54. (MLRA 7:7)
(Clearing of land)

GOL'DSHTEYN, I.P.; GUR'YANOVA, Ye.N.; DELINSKAYA, Ye.D.; KOCHESHKOV, K.A.

Dipole moments of organotin chlorides and their complex-forming ability. Dokl.AN SSSR 136 no.5:1079-1081 F '61. (MIRA 14:5)

1. Fiziko-khimicheskiy institut im. L.Ya.Karpova. 2. Chlen-korrespondent AN SSSR (for Kocheshkov).
(Tin organic compounds--Dipole moments)

5 3830
5 3700

AUTHORS: Gol'shteyn, I. P., [illegible] Corresponding Member AS USSR

TITLE: Complexes of diphenyl [illegible] with [illegible] and [illegible] chlorides

PERIODICAL: Akademiya nauk SSSR [illegible]

TEXT: The [illegible] complexes [illegible] diphenylethylene (DPE) with $SnCl_4$, $C_6H_5SnCl_3$, and $(C_6H_5)_2SnCl_2$. [illegible] properties of $SnCl_4$ is explained with the formation of [illegible] clarifying the nature of these complexes [illegible] over infrared spectra, (B) electron spectra [illegible] by (A). In previous papers [illegible] polarization [illegible] DMM, [illegible] [illegible] $SnCl_4 > C_6H_5SnCl_3 > (C_6H_5)_2SnCl_2$. The [illegible] with [illegible] [illegible] another [illegible]

Card 1/5

Complexes of diphenyl ethylene with [illegible]

[illegible] The [illegible] systems were studied [illegible] DPE

[illegible] DPE. [illegible] DPE [illegible] DPE

DPE-[illegible] (A) The spectra were taken [illegible] spectrophotometer [illegible] The mixtures were prepared in an airtight [illegible] nitrogen and filled into cuvettes [illegible] and [illegible] DPE [illegible] with an absorption band [illegible] 10 mu and an intensity [illegible] 820 mu (B) The electron spectra were taken with a [illegible] SF [illegible] spectrophotometer in benzene solution. Results of (A) are compared with the spectra of pure DPE. The spectra of systems (1) and (2) [illegible] (1) The bands of the series [illegible] 1400, [illegible] intensity of the band 1570 cm-1 decreases [illegible] disappear, the [illegible] are all connected with the double bond in the molecule [illegible] The band [illegible] belongs to the stretching vibration [illegible] frequency is reduced [illegible] the [illegible] bands whose 1400 and 1570 cm-1 belong to the deformation [illegible] of the methylene group on the double bond. The band [illegible] the vibrations of

Card 2/[illegible]

24056

Complexes of diphenyl ethylene with [illegible]

the phenyl rings. Its intensity is greatly due to the interaction with the conjugate double bonds. (2) New bands appear in the regions 1376, 1250, and 1170 cm^{-1}. (3) The band 1625 cm^{-1} of the benzene ring vibration is slightly shifted, and its intensity increases. Besides, the authors measured the spectrum of the solution of the DPE dimer in DPE to prove that the above-mentioned changes [illegible] connected with the appearance of the dimer in the above systems. This spectrum shows two additional bands which are absent in the spectrum of the monomer. The band 1665 cm^{-1} belongs to the stretching vibrations of the C=C bond in the dimer. The band 1285 cm^{-1} possibly belongs to the CH deformation vibrations on the double bond. None of these two bands appears in the spectra of systems (a) and (b). The authors consider this fact as a proof that the changes (1)-(3) in the infrared spectra are not caused by the dimer but by the intermediates of the interaction of DPE with the [illegible]. Further spectral data support that the [illegible] formed in [illegible] with $SnCl_4$ and $C_6H_5SnCl_3$. (C) The authors measured the dipole moment of DPE in benzene solution with excess $SnCl_4$, and obtained the value 1.[illegible] D. This is lower by 0.7-0.8 D rather than the dipole moment in benzene. For these reasons, the

Card 3/5

24052

Complexes of ligand with olefins [illegible]

authors think that the band 480 cm [illegible] A. G. Evans et al. [illegible] The absorption band in the [illegible] complex According to A. N. Terenin et al. [illegible] 480 [illegible]); Inv. AN SSSR, OKhN, [illegible] formation increases [illegible] hexane and $SnCl_4$; heating, [illegible] and 1200 cm^{-1}. The band [illegible] cm^{-1} [illegible] the reduced [illegible] cm^{-1} [illegible] π-complex of the dimer with the [illegible] and (b), the authors [illegible] π-complexes in system (b). The [illegible] tolerless, and [illegible] were [illegible] compared with the spectra of [illegible] above-mentioned [illegible] monomers. [illegible] polymerization of olefins, whereas [illegible] $(C_6H_5)_3SnCl_2$. There are 5 figures, 1 table, and [illegible] [illegible] and [illegible]

Card 4/5

Complexes of diphenyl ethylene [illegible]

Soviet-bloc. The 4 references to [illegible] read as follows: Ref. 1: P. H. Plesh, [illegible] Polymerization and Related Complexes, London, 1953; Ref. 2: M. Szwarc, D. M. Stearns, Quart. Rev., 6, 1 (1952); Ref. 3: A. G. Evans et al., [illegible] Soc., 2975, 1947, 105; 1950, 2957; 1955, 1924; Ref. 4: J. E. Crooks, L. E. Orgel, J. Chem. Soc., 1942, 567

ASSOCIATION: Fiziko-khimicheskiy institut im. L. Ya. Karpova (Physico-Chemical Institute imeni L. Ya. Karpov)

SUBMITTED: December 24, 1960

Card 5/5

GOL'DSHTEYN, I.P.; GUR'YANOVA, Ye.N.; KOCHESHKOV, K.A.

Molecular compounds of tin tetrachloride with organic sulfides.
Dokl.AN SSSR 138 no.5:1099-1102 Je '61. (MIRA 14:6)

1. Fiziko-khimicheskiy institut im. L.Ya.Karpova. 2. Chlen-korrespondent AN SSSR (for Kocheshkov).
(Tin organic compounds)

GUR'YANOVA, Ye.N.; GOL'DSHTEYN, I.P.

Dielectric polarization method for donor-acceptor type complexes. Zhur. ob. khim. 32 no.1:12-16 Ja '62. (MIRA 15:2)
(Complex compounds—Dipole moments)

S/079/62/032/001/011/016
D204/D302

AUTHORS: Gol'dshteyn, I. P., Gur'yanova, Ye. N. and Kocheshkov, K. A.

TITLE: Polar properties of complexes of $SnCl_4$ with unsaturated compounds

PERIODICAL: Zhurnal obshchey khimii, v. 32, no. 1, 1962, 317-318

TEXT: Dipole moments of unsaturated organic compounds in benzene solutions with and without $SnCl_4$ were measured by dielectrometric titration to determine the nature of the bonds between the adducts, as such complexes are of interest in polymerization processes catalyzed by metal halides. Dipole moments of octene-1, myrcene, stilbene and 1,1-diphenyl ethylene were only increased by 0.8-1D in the presence of 0.05-0.1 M $SnCl_4$, which formed π-complexes with the hydrocarbons, as opposed to a typical increase of 7-8 D in complexes of the donor acceptor type. Complexes of $SnCl_4$ with thiophan and tetrahydrofuran (class I) showed marked increases (2-2.2 and

Card 1/2

Polar properties of complexes of

S/073/62/032/001/011/016
D204/D302

(.7 D), whilst the dipole moments of those with furan and thiophen (class II) were only increased by [illegible] and [illegible] D. It was therefore concluded that complexes I are of the donor-acceptor type whilst complexes II utilize the π-electrons. Reduction in the basic properties of O and S in furan and thiophen is ascribed to the neighboring double bonds. Further work is in progress. There are 4 references: 2 Soviet-bloc and 1 non-Soviet-bloc. The reference to the English-language publication reads as follows: H. Plesch, Cationic polymerization and related complexes, London, 1953.

ASSOCIATION: Fiziko khimicheskiy institut imeni Karpova (Physico Chemical Institute imen. Karpov)

SUBMITTED: March 21, 1961

Card 2/2

S/020/62/144/003/023/030
B119/B101

AUTHORS: Gol'dshteyn, I. P., Gur'yanova, Ye. N., and Kosheshkov, K. A., Corresponding Member AS USSR

TITLE: Complexes of tin tetrachloride with unsaturated compounds containing heteroatoms

PERIODICAL: Akademiya nauk SSSR. Doklady, v. 144, no. 3, 1962, 569-572

TEXT: The complex formation of $SnCl_4$ with furan, 2-methyl furan, thiophene, and diallyl sulfide was studied. The results were compared with those obtained applying $SnCl_4$ to analogous saturated compounds (tetrahydrofuran, tetrahydrothiophene, 2,5-dimethyl thiophane, and dipropyl sulfide). The change in the dielectric constant and in the density of $SnCl_4$ solutions in benzene and hexane (0.05 - 0.08 g-moles/liter) was measured with small amounts of the above-mentioned substances successively added. Where appropriate the method of cryoscopic titration was used. (Results

Card 1/3

Complexes of tin... S/020/62/144/003/020/030
B119/B101

on infrared spectroscopic studies will be published soon.) With two possible reaction centers in the organic molecule, $SnCl_4$ in extreme cases gives rise, either to complexes of the donor-acceptor type (diallyl sulfide) or to π-complexes (furan, thiophene, 2-methyl furan). Intermediate types are possible, depending on the molecule structure. The presence of two C atoms in sp^2 state close to the heteroatom in the organic molecule suppresses its ability to form donor-acceptor complexes with $SnCl_4$. The saturated compounds form stable complexes of the donor-acceptor type ($SnCl_4$: donor = 1:1 and 1:2). When π-complexes are formed, $SnCl_4$ is suitable as polymerization catalyst. There are 3 figures and 1 table. The most important English-language references are: P.H. Plesh, Cationic Polymerisation and Related Complexes, London, 1953. A. G. Evans, J. Lewis, J. Chem. Soc., 1957, 2975; A. G. Evans, N. H. Jones, J. H. Thomas, J. Chem. Soc., 1957, 105; A. G. Evans, N. Jones et al., J. Chem. Soc., 1956, 2757.

ASSOCIATION: Fiziko-khimicheskiy institut im. L. Ya. Karpova (Physiochemical Institute imeni L. Ya. Karpov)

Card 2/3

Complexes of tin...

S/020/62/144/003/020/030
B110/B101

SUBMITTED: February 22, 1962

Card 3/3

GUR'YANOVA, Ye.N.; GOL'DSHTEYN, I.P.; [illegible]EV, Ye.N.; [illegible], L.V.

Structure of some α, β -unsaturated sulfur compounds based on data provided by dipole moments. Izv. AN SSSR. Otd.khim.nauk no.5:810-812 My '62. (MIRA 15:6)

1. Fiziko-khimicheskiy institut im. L. Ya. Karpova i Institut organicheskoy khimii im. N.D.Zelinskogo AN SSSR.
(Sulfur organic compounds—Dipole moments)

GOL'DSHTEYN, I.P.; GUR'YANOVA, Ye.N.; KOCHESHKOV, K.A.

Complexes formed by tin tetrachloride with unsaturated compounds containing heteroatoms. Dokl.AN SSSR 144 no.3:569-572 My '62. (MIRA 15:5)

1. Fiziko-khimicheskiy institut im. L.Ya.Karpova. 2. Chlen-korrespondent AN SSSR (for Kocheshkov).
(Tin chlorides) (Unsaturated compounds)

GOL'DSHTEYN, I P.; IL'ICHEVA, Z.F.; SLOVOKHOTOVA, N.A.; GUR'YANOVA, Ye.N.; KOCHESHKOV, N.A.

Spectroscopic investigation of complexes formed by thiophane and thiopene with tin tetrachloride. Dokl.AN SSSR 144 no.4: 788-791 Je '62. (MIRA 15:5)

1. Fiziko-khimicheskiy institut im. L.Ya.Karpova. 2. Chlen-korrespondent AN SSSR (for Kocheshkov).
(Thiophene--Spectra) (Tin chlorides)

GOL'DSHTEYN, I.P.; KESSLER, Yu.M.; POVAROV, Yu.M.; GORBANEV, A.I.

Dipole moment of N-methylformamide. Zhur.strukt.khim. 4 no.3: 445-446 My-Je '63. (MIRA 16:6)

1. Institut elektrokhimii AN SSSR.
(Formamide—Dipole moments)

GOL'DSHTEYN, I.P.; ALPATOVA, N.M.; KESSLER, Yu.M.; GUR'YANOVA, Ye.N.; GORBANEV, A.I.

Interaction of hydrogen chloride, tetra-n-butyl ammonium chloride with trimethylchlorosilane in benzene solutions. Izv. AN SSSR. Ser.khim. no.9:1683-1685 S '63. (MIRA 16:9)

1. Institut elektrokhimii AN SSSR.
(Ammonium compounds) (Silane) (Hydrochloric acid)

ARZAMANOVA, I.G.; GUR'YANOVA, Ye.N.; GOL'DSHTEYN, I.P.

Determination of the thermodynamic constants of molecular compounds by means of dielectrometric titration. Dokl. AN SSSR 155 no.6: 1391-1393 Ap '64. (MIRA 17:4)

1. Fiziko-khimicheskiy institut im. L.Ya.Karpova. Predstavleno akademikom S.S.Medvedevym.

ZEMLYANSKIY, N. N.; GOL'DSHTEYN, I. P.; GURYANOVA, Ye. N.; FANOV, Ye. M.; SLOVOKHOTOVA, N. A.; KOCHESHKOV, K. A.

Structure of compounds with a stannoxane bond studied by means of dipole moments and infrared spectra. Dokl. AN SSSR 156 no. 1:131-134 My '64. (MIRA 17:5)

1. Fiziko-khimicheskiy institut im. L. Ya. Karpova. 2. Chlen-korrespondent AN SSSR (for Kocheskhov).

L 3213-66 EWT(m)/EWP(j)/T/EWP(t)/EWP(b) IJP(c) JD/JM/RM

ACCESSION NR: AP5009223 S/0020/65/161/001/0111/0114 27

AUTHOR: Gol'dshteyn, I. P.; Gur'yanova, Ye. N.; Kocheshkov, K. A. 26
(Corresponding member AN SSSR) B

TITLE: Polarity and strength of intermolecular bonds in complexes of tin tetrachloride and organic sulfides

SOURCE: AN SSSR. Doklady, v. 161, no. 1, 1965, 111-114

TOPIC TAGS: polarity, intermolecular bond, tin compound, tin tetrachloride, sulfide, heat of formation, sulfur containing compound, dipole moment

ABSTRACT: Measurements have been made of the heat of formation and dipole moments of complexes of tin tetrachloride with sulfur containing compounds. The dipole moments were determined by dielectrometric titration and the heats of formation by calorimetric titration. To obtain complexes with a 1:2 composition and a known cis-formation, compounds of the following type were used: $R-S-(CH_2)_n-S-R$ ($n = 1,2,3,4,5,6$, or 10, and $R = C_2H_5$ or C_4H_9). It was found that at small concentrations (0.03 g-mole/liter), compounds $SnCl_4 \cdot R-S-(CH_2)_n-S-R$, where $n = 1$, 2, or 3, are monomers. Compounds

Card 1/2

L 3213-66

ACCESSION NR: AP5009223

with n > 3 are associated. Judging from the values of the dipole moments, such associated compounds have a cyclic structure. Experimental values of the heat of formation $-\Delta H$ (for one Sn...S bond) and the dipole moments $\mu_{Sn...S}$ lie well on a straight line $\mu_{Sn...S}$-($\Delta H_{Sn...S}$). Introducing a correction of ~1 kcal/mole into the experimental values of $-\Delta H$ to take account of the dissociation energy of the complex $SnCl_4$ from benzene, we can speak of a direct proportion between $-\Delta H_{Sn...S}$ and $\mu_{Sn...S}$. The above relationship is obviously general for n, σ-complexes of the donor-acceptor type. It appears that the bonds in compounds of this type are the result of an unshared electron pair in the donor molecule and of the vacant valence orbits in the acceptor molecule. Orig. art. has: 2 figures and 1 table.

ASSOCIATION: Fiziko-khimicheskiy institut im. L. Ya. Karpova (Physicochemical Institute)

SUBMITTED: 030ct64 ENCL: 00 SUB CODE: IC, GC

NR REF SOV: 005 OTHER: 004

Card 2/2

SKLYARENKO, I.S.; GRIGOR'YANOVA, Ye.N.; ZARAOVICH, I.S.

Colorimetric titration method for determining the costs of formation and dissociation constants of molecular complexes. Zhur. fiz. khim. 39 no.4:993-997 Ap '65.

1. Fiziko-khimicheskiy institut im. P.P. Sarpova, Moskva. Submitted [illegible]

USSR/Physical Chemistry - Electrochemistry, B-12

Abst Journal: Referat Zhur - Khimiya, No 19, 1956, 61170

Author: Tur'yan, Ya. I., Gorodishteyn, I. S.

Institution: None

Title: Oxygen Overvoltage of a Nickel Electrode at High Current Densities

Original Periodical: Zh. prikl. khimii, 1956, 29, No 3, 379-384

Abstract: As a continuation of previous work (Eiseyskiy, V. N., Tur'yan, Ya. I., Zh. fiz. khimii, 1950, 24, 567) investigated was the overvoltage $(\eta)O_2$ at Ni-anode in 7.5 N KOH at i 0.04-10 a/cm^2 and temperatures of 0°-85°. Measurement of potentials stabilized in time with the given i was carried out on rotating electrode. Comparison of the derived curves (η, lgi) for different temperatures with data of previous work (see reference above) permits to reach the conclusion of the presence upon the curves within the region of i 10^{-4} - 10^{-1} a/cm^2, of 4 different sections. The linear sections within the region of high i, the length of which decreases with rise

Card 1/2

MENICHENKO, Viktor Alekseyevich; TOMCHIN, Boris Zinov'yevich; GOL'DSHTEYN, I.S., red.; VENTSEL', I.V., red.izd-va; BELOGUROVA, I.A., tekhn. red.

[Locating leakage in the sheathings of communication cables] Opredelenie mest negermetichnosti obolochek kabelei sviazi; iz opyta stroitel'stva i ekspluatatsii kabel'nykh linii sviazi. Leningrad, 1963. 23 p. (MIRA 17:2)

AUTHOR: Gol'dshteyn, I.Ye. SOV/90-58-11-4-6

TITLE: The Application of the New Gas-Drilling Installation [illegible] (Primenenie novoy ustanovki DEB-2 dlya bureniya na gaz

PERIODICAL: Energeticheskiy byulleten', 1958, Nr 11, pp 21-26 [illegible]

ABSTRACT: The author describes the experiences made with a new [illegible] equipment at the Shebelinka gas fields near Khar'kov. To eliminate dangers connected with gas escapes and explosions in the course of drilling, he recommends the use of an [illegible] diesel-electric driving set, marked as DEB-2, developed by the Gidroneftemash Institute and produced by the Experimental-Machine Plant of the same Institute. The new installation consists of 4 diesel motors connected with pumps by means of pneumatic tire clutches and [illegible]-shaped leather belts [illegible] 4 diesel motors drive 2 synchronous generators [illegible] in turn supply electric energy to [illegible] the winch U 2-4-5. The winch has electromotors [illegible] with 160 kW capacity each, and control stations of the [illegible] type. The author then describes in detail the entire installation, and gives operational data. Comparing the advantages of the new system with the drilling installation [illegible]

Card 1/3

The Application of the New Gas Drilling Installation DEB 2

the author states that the new system is to be better for the following reasons. 1) Capacity of the diesels can be fully exploited 2) Even at hoist and lower operations the new system allows the use of all 4 diesels [illegible] installations can only operate with 3 diesels in such a [illegible] 3) Diesels of the new system can be overloaded 4) Since diesels are placed about 40 m away from the derrick the working conditions of the brigade become better, and the gas explosion danger is almost excluded 5) The use of the new diesel-electro-drilling opens wide possibilities of exploratory and industrial oil and gas drilling in regions where no power is available 6) The new system enables the dispatcher to smoothly regulate current frequency within the range of [illegible] to 70 cycles. He concludes that 1) It is expedient to use the DEB-2 system for oil and gas drilling 2) Production of DEB-2 installations with 600 or 700 h p capacity for oil

Card 2/3

SOV/90-58-11-4/6

The Application of the New Gas-Drilling Installation DEB-2

well drilling must be started. 3) The Shebelinka gas-prospecting area should get 4 more DEB-2 installations in the near future. There are 3 tables, 1 block-diagram and 2 Soviet references.

1. Well drilling--Equipment 2. Well drilling--Hazards
3. Drilling machines--Performance

Card 3/3

GOL'DSHTEYN, I.Ye.; SULKHANISHVILI, I.N.

Results of industrial testings of a diesel electric gas-well drilling unit. Gaz. prom. 4 no.7:7-12 Jl '59. (MIRA 12:10)
(Boring machinery)

YATROV, S.N.; SMIRNOV, A.S.; GOL'DSHTEYN, I.Ye.; GLUSHCHENKO, Ye.I.

Change in the quality of clay muds in drilling sulfate- and salt-bearing sediments. Neft.khoz. 37 no.12:7-12 D '59. (MIRA 13:5)

(Oil well drilling fluids)